sartorius

Weigh-Detect-Control

IF weighing platforms
Flat-bed scales

708 basic models with customized options

IF Platform with Standard Ramp

Wheel Option for Easy Porability

Pressure Lift Option in Closed Position

Pressure Lift Option in Open Position

The product
IF flat-bed scales offer weighing capacities of 150 to 3000 kg with resolutions of 30,000 d. This product line is available in platform sizes from 23.6" x 23.6" to 78.7" x 59.1", with custom dimensions available on request. The low profile design makes it easy to load, so that pit installation is unnecessary. With a choice of painted or stainless steel finishes, these scales are suitable for use in both dry and wet conditions. The stainless steel versions are approved for use in hazardous areas and manufactured in full compliance with FM standards.

The IF series offers 708 basic models of flat-bed scales for any task, from basic weighing to convenient, application-oriented weighing systems. From processing to the chemical industry, the IF line of flat-bed scales can do it all thanks to the wide range of resolutions and capacities. And, as if the diversity of the basic models wasn't enough, the additional custom features we can provide on request make this range truly unique.

If all of this leaves any room to wish for more – such as greater mobility or easier cleanability – just take your pick from the array of options to put together your ideal solution.

Main features
Strain-gage technology:
4 hermetically sealed load cells ensure precise results.

Low profile: standard platform height is 35 mm/1.4"; optional heights available down to 25 mm.

Materials offered: powder coated or AISI 304 bead-blasted stainless steel.

Resolution: 30,000 d

IP protection: power-coated platforms meet IP65 requirements; stainless steel versions are rated to IP68.

A drive-on ramp is included with every platform as standard equipment.

*IFXS4 platforms are certified for use in Class 1,2,3, Div. 1 Groups ABCDEF T4 (Verification of Intrinsic Safety included; also covers any explosion-protected Sartorius components combined with this platform).

**Approval met only with FCT01-X Indicator Class 1 Div. 2 Groups ABCD met with X5/FM controllers.*

Options
On request, stainless steel models can be made with an electropolished finish, or the entire platform can be made from AISI 304 electropolished or AISI 316 Ti stainless steel.

Manually operated lifting mechanism (patented system) for effortless raising and repositioning of the platform makes it easy to clean the surface under the platform at the place of installation.

Pressure Lift-Option

The product
IF Pharmaline flat-bed scales offer weighing capacities of 150 to 3,000 kg with resolutions up to 30,000 d.

This product line is available in platform sizes: 39.4"x23.6", 39.4"x31.5", 39.4"x39.4", 49.2"x39.4" and 49.2'X49.2". The low profile design makes it easy to load, so that pit installation is unnecessary. The stainless steel versions are ideal for use in pharmaceutical applications where stringent hygiene standards apply, and are approved for use in hazardous areas and fully FM compliant.

The IF Pharmaline series offers optimal solutions for weighing containers in pharmaceutical clean rooms where pit installation is not desired. Thanks to their low profile design (starting at 25 mm) and short, space-saving drive-on ramps, positioning containers on the platform is easy. The high-quality AISI 304 or 316 Ti stainless steel design with rounded corners is also available in electropolished versions (surface roughness Ra < 0.4 µm).
The platform lifting mechanism is made entirely of stainless steel, easy to use and requires no physical strength thanks to special gas-pressure cylinders.

The lifting mechanism meets the requirements of the latest occupational health and safety standards (international NIOSH Lifting Equation).

Use in Clean Rooms
Because there are no moving parts on the IF scale, it can be used in clean rooms rated to class 10,000 in accordance with US Federal Standard 209D (equivalent to Class C in accordance with EEC-GWP)

Specifications

General View

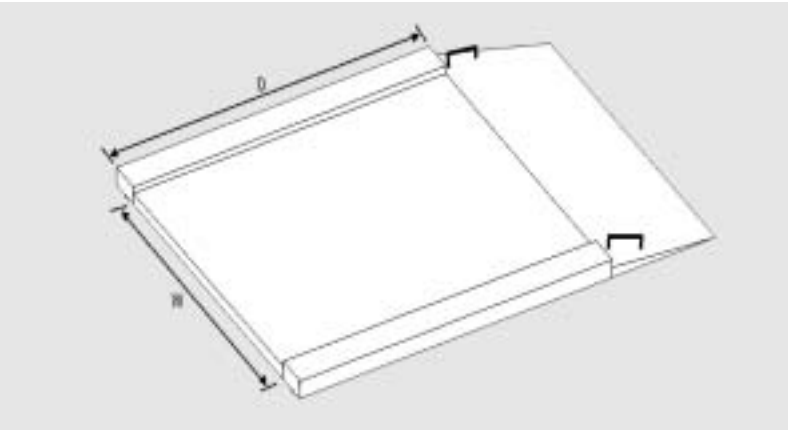

				Pressure Lift option available							
Code	**GG**	**IG**	**II**	**LG**	**LI**	**LL**	**NL**	**NN**	**RN**	**RR**	**WR**
Dimensions in mm (D × W)	600 × 600	800 × 600	800 × 800	1,000 × 600	1,000 × 800	1,000 × 1,000	1,250 × 1,000	1,250 × 1,250	1,500 × 1,250	1,500 × 1,500	2,000 × 1,500

Weighing capacity	**Standard height | Optional height in (mm)**										
150 kg	35|25	35|25	35|25	35|25	35|25	35|25	35|25	35|25	35|25	45|35	45|35
300 kg	35|25	35|25	35|25	35|25	35|25	35|25	35|25	35|25	35|25	45|35	45|35
600 kg	35|25	35|25	35|25	35|25	35|25	35|25	35|25	45|35	45|35	45|35	45|35
1,000 kg	35|25	35|25	35|25	35|25	35|25	35|25	35|25	45|35	45|35	45	45
1,500 kg		35|25	35|25	45|35	45|35	45|35	45|35	45|35	45	45	
3,000 kg						45	45	45	45	45	55|45

The length of the cable for connecting an indicator is 6 m/19.7 ft.

Maximum Configurable Resolution

Capacity in kg	30,000 d in g
150	5
300	10
600	20
1,000	50
1,500	50
3,000	100

Example for placing an order: platform model IFP4-1500RR-I

IF	P	4	–	1500	RR	–	I
Plat-form	Finish: P = Painted steel S = Stainless steel XS = Ex-protected stainless steel	No. of load cells		Weighing capacity in kg	Platform size		Resolution: 30,000 d = I

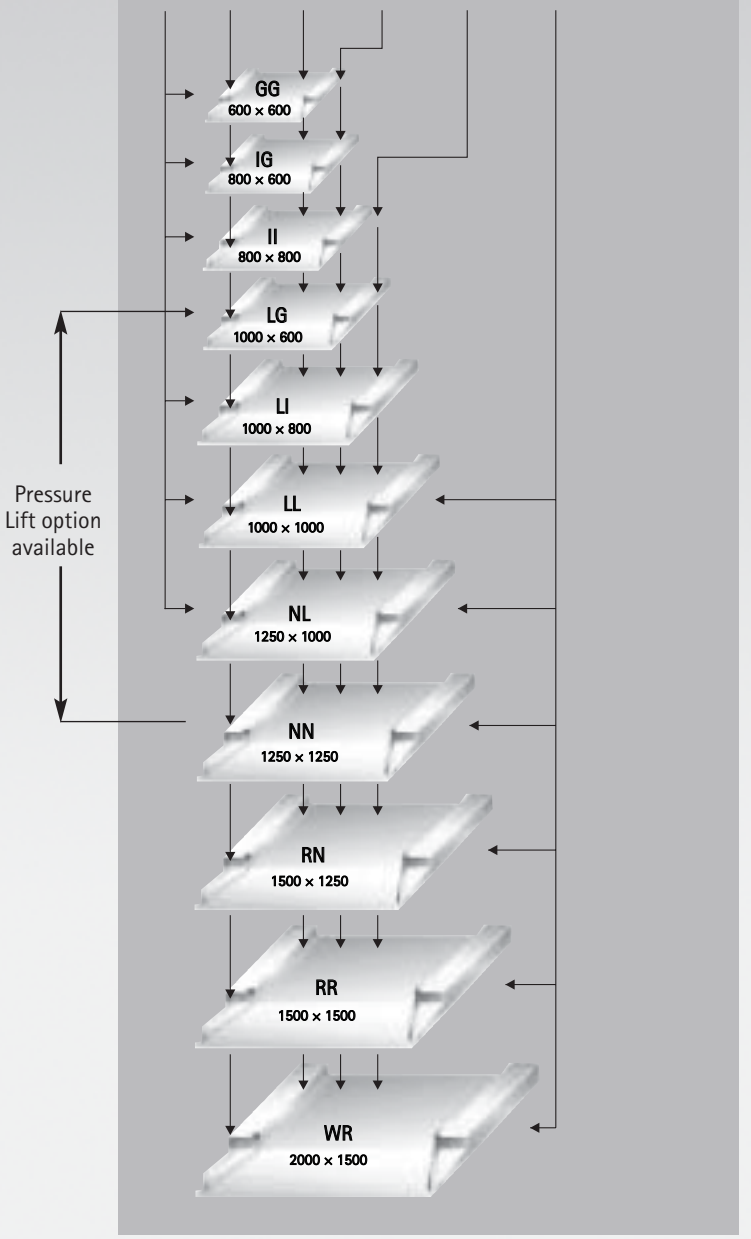

Laboratory, Industrial and Process Weighing

From Start to Finish

Sartorius Corp.
131 Heartland Blvd.
Edgewood, NY 11717
800-635-2906
www.sartorius.com

Sartorius Inc.
2179 Dunwin Drive #4&5
Mississauga, Ontario
Canada L5L 1X2
800-668-4234

ILIT030